CENTRAL
Creekside Villas

PLAN B1

640 sqft
1 Bed + Den | 1 Bath

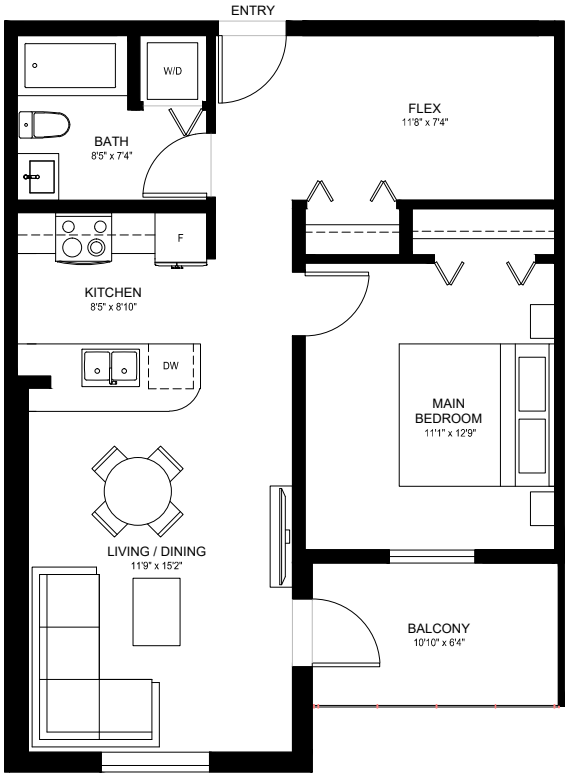

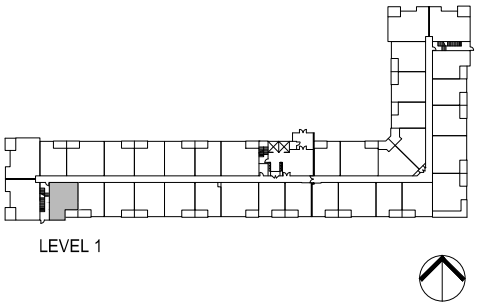

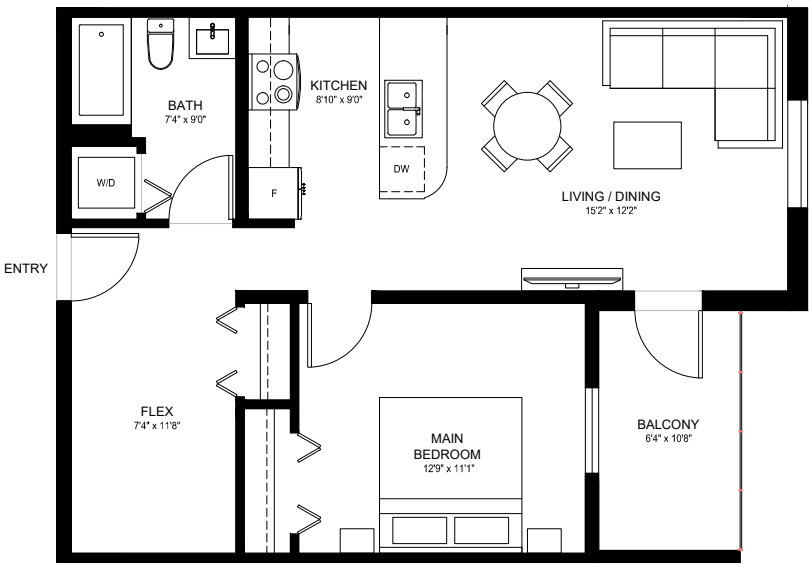

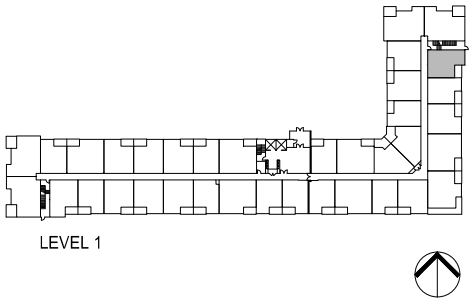

The developer reserves the absolute right to modify, cancel or extend this offer at any time without prior notice. Actual interiors, exteriors and views may be noticeably different than what is depicted in photographs. This is not an offering for sale. Any such offering may only be made with the applicable offer to purchase and agreement of sale and disclosure statement. Prices and availability are subject to change without notice. E. & O.E.

VESTA